Summary in Graph

Exam Summary (GO Classes CS Test Series 2026 | Computer Networks | Subject Wise Test 2)

Qs. Attempted:	0 0 + 0	Correct Marks:	0 0 + 0
Correct Attempts:	0 0 + 0	Penalty Marks:	0 0 + 0
Incorrect Attempts:	0 0 + 0	Resultant Marks:	0 0 + 0

Total Questions:	30 20 + 10
Total Marks:	40 20 + 20
Exam Duration:	90 Minutes
Time Taken:	0 Minutes

Individual Question Statistics

Select Metric: Marks Obtained

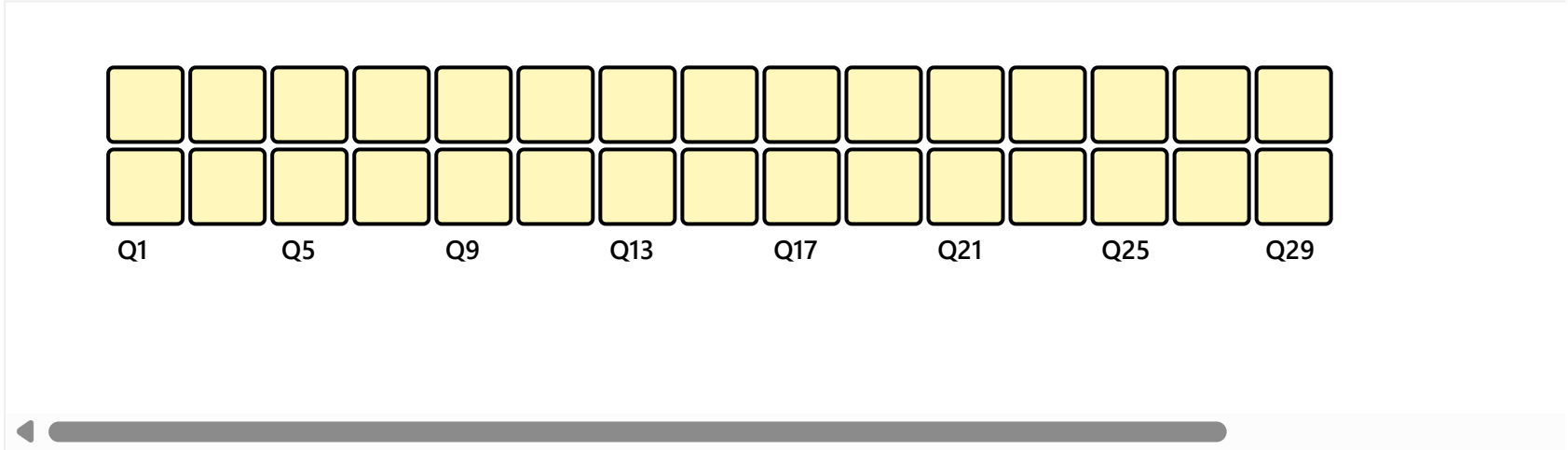

* Average Stats based on first-attempt stats of Top 10% (44) out of 444 users

EXAM RESPONSE EXAM STATS FEEDBACK

Technical

Q #1 Multiple Choice Type Award: 1 Penalty: 0.33 Computer Networks

Suppose we run the sliding window algorithm with $SWS = 5$ and $RWS = 3$, and no out-of-order arrivals. Find the smallest value for MaxSeqNum such that if DATA [MaxSeqNum] is in the receive window, then DATA [0] can no longer arrive.

A. 5

B. 7

C. 8

D. 10

Your Answer: | Correct Answer: B | Not Attempted | Time taken: 00min 00sec | Discuss

Q #2 | Multiple Choice Type | Award: 1 | Penalty: 0.33 | Computer Networks

In the diagram below, circles represent routers, lines represent links, letters are router names, and numbers indicate link costs.

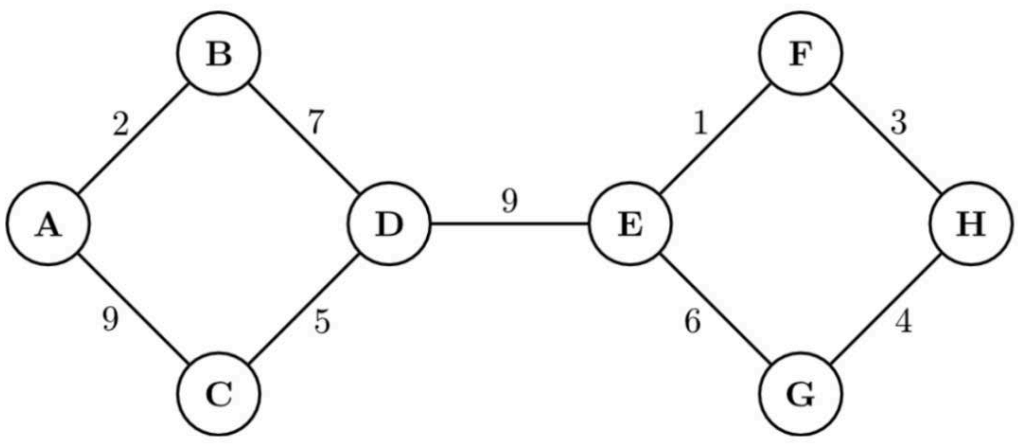

Which edges should be removed to create a shortest-path spanning tree rooted at router C?

A. $\mathrm{A}-\mathrm{B}$ and $\mathrm{E}-\mathrm{F}$

B. $\mathrm{A}-\mathrm{C}$ and $\mathrm{E}-\mathrm{G}$

C. $\mathrm{A}-\mathrm{C}$ and $\mathrm{D}-\mathrm{E}$

D. $\mathrm{B}-\mathrm{D}$ and $\mathrm{G}-\mathrm{H}$

Your Answer: | Correct Answer: D | Not Attempted | Time taken: 00min 00sec | Discuss

Q #3 | Multiple Choice Type | Award: 1 | Penalty: 0.33 | Computer Networks

Using Go-Back-N retransmission strategy, if frame $(n-1), n, (n+1), (n+2)$ have been sent, frame ($n-2$) has been successfully acknowledged, the ACK for frames ($n-1$) and n are lost, but the ACK for frame ($n+1$) arrives before the timer for ($n-1$) expires, then:

A. the frame next expected by the receiver is $n-1$

B. the frame next expected by the receiver is n

C. the frame next expected by the receiver is $n+1$

D. the frame next expected by the receiver is $n+2$

Your Answer: | Correct Answer: D | Not Attempted | Time taken: 00min 00sec | Discuss

Q #4 Numerical Type Award: 1 Penalty: 0 Computer Networks

Consider the following chain topology:

$$A - B - C - D - E$$

A is sending packets to E using a reliable transport protocol. Each link above can transmit one packet per second. There are no queues or other sources of delays at the nodes (except the transmission delay, of course).
What is the throughput of a stop-and-wait protocol at A in the absence of any losses at the nodes in pkts/s

Your Answer: Correct Answer: 0.125 Not Attempted Time taken: 00min 00sec Discuss

Q #5 Numerical Type Award: 1 Penalty: 0 Computer Networks

Consider the following chain topology:

$$A - B - C - D - E$$

A is sending packets to E using a reliable transport protocol. Each link above can transmit one packet per second. There are no queues or other sources of delays at the nodes (except the transmission delay of course).
Suppose A is running a sliding window protocol with a window size of four. In the absence of any losses, What is the utilization of link B-C?

Your Answer: Correct Answer: 0.5 Not Attempted Time taken: 00min 00sec Discuss

Q #6 Numerical Type Award: 1 Penalty: 0 Computer Networks

Calculate the latency (total delay from first bit sent to last bit received) for the following: Sender and receiver are separated by two 1 -Gigabit/s links and a single switch. The packet size is 5000 bits, and each link introduces a propagation delay of 10 microseconds. Assume that the switch begins forwarding immediately after it has received the last bit of the packet and the queues are empty. (in microseconds)

Your Answer: Correct Answer: 30 Not Attempted Time taken: 00min 00sec Discuss

Q #7 Numerical Type Award: 1 Penalty: 0 Computer Networks

Consider a $40\text{kbit}/\text{s}$ network link connecting the earth to the moon. The moon is about 1.5 light-seconds from earth. 1 Kbyte packets are sent over this link using a stop-and-wait protocol for reliable delivery, What is the utilization of the link? (in terms of percentage correct upto 1 decimal place)

Your Answer: Correct Answer: 6.2:6.6 Not Attempted Time taken: 00min 00sec Discuss

Q #8 Multiple Choice Type Award: 1 Penalty: 0.33 Computer Networks

Name the event at point B on the TCP congestion-window evolution that causes the sender to decrease its window.

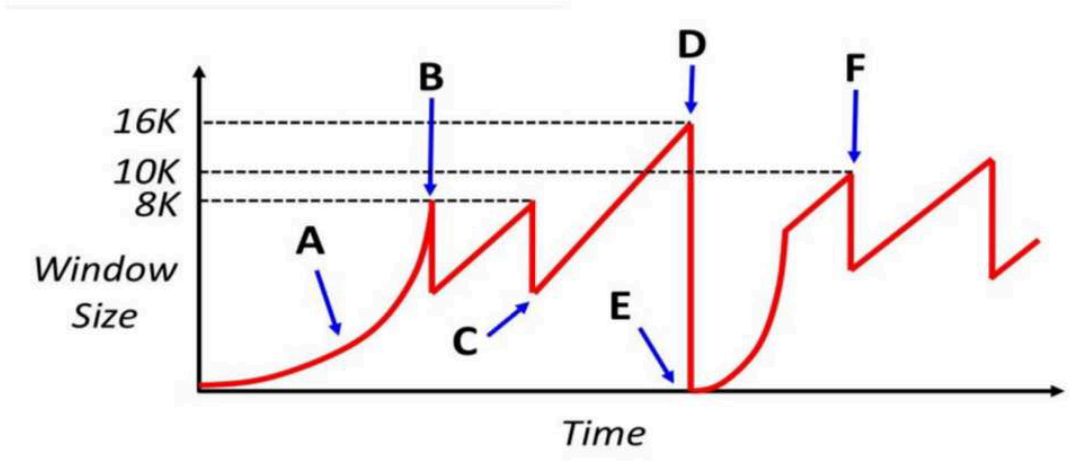

A. Triple Duplicate ACK

B. Slow Start

C. Packet loss

D. Timeout

Your Answer: | Correct Answer: A | Not Attempted | Time taken: 00min 00sec | Discuss

Q #9 | Numerical Type | Award: 1 | Penalty: 0 | Computer Networks

Consider sending a large file using TCP over a connection with no loss. Assuming we start with a CWND of 6 MSS , what is the average throughput over the first 6 RTTs ? (Defined over MSS/RTT)

Your Answer: | Correct Answer: 8.5 | Not Attempted | Time taken: 00min 00sec | Discuss

Q #10 | Multiple Choice Type | Award: 1 | Penalty: 0.33 | Computer Networks

The routing table of a router is shown below:

Destination	Subnet Mask	Interface
128.75.43.0	255.255.255.0	Eth0
128.75.43.0	255.255.255.128	Eth1
192.12.17.5	255.255.255.255	Eth3
Default		Eth2

On which interface will the router forward packets addressed to destinations $128.75.43.16$ and $192.12.17.10$ respectively?

A. Eth1 and Eth2

B. Eth0 and Eth2

C. Eth0 and Eth3

D. Eth1 and Eth3

Your Answer: | Correct Answer: A | Not Attempted | Time taken: 00min 00sec | Discuss

Q #11 Multiple Choice Type Award: 1 Penalty: 0.33 Computer Networks

Consider the IP address $132.239.15.87$.
Suppose that we were still using class-based addressing and the network administrator had decided to break the network into 16 different subnets of equal size, what is the subnet address of the subnet to which this IP address would be attached?

A. $255.255.240.0$

B. $132.239.0.0$

C. $132.239.15.0$

D. $132.239.240.0$

Your Answer: Correct Answer: B Not Attempted Time taken: 00min 00sec Discuss

Q #12 Multiple Choice Type Award: 1 Penalty: 0.33 Computer Networks

An error-correcting code has the following code words:
$00000000, 00001111, 01010101, 10101010, 11110000$. What is the maximum number of bit errors that can be corrected?

A. 0

B. 1

C. 2

D. 3

Your Answer: Correct Answer: B Not Attempted Time taken: 00min 00sec Discuss

Q #13 Multiple Choice Type Award: 1 Penalty: 0.33 Computer Networks

A channel has a bit rate of 4 kbps and a one-way propagation delay of 20 ms. The channel uses the stop-and-wait protocol. The transmission time of the acknowledgment frame is negligible. To get a channel efficiency of at least 50%, the minimum frame size should be

A. 80 bytes

B. 80 bits

C. 160 bytes

D. 160 bits

Your Answer: Correct Answer: D Not Attempted Time taken: 00min 00sec Discuss

Q #14 Multiple Choice Type Award: 1 Penalty: 0.33 Computer Networks

What is the maximum size of data that the application layer can pass on to the TCP layer below?

A. Any size

B. 2^{16} bytes size of TCP header

C. 2^{16} bytes

D. 1500 bytes

Your Answer: | Correct Answer: A | Not Attempted | Time taken: 00min 00sec | Discuss

Q #15 | Multiple Choice Type | Award: 1 | Penalty: 0.33 | Computer Networks

Suppose node A sends a 1280-byte IPv4 datagram to node E. The packet needs to travel through a path having 3routers and 4 links. Each link has an MTU of 660 bytes and drops 50% of packets due to bit errors. Assume IP header size is 40 Bytes. What is the probability that the datagram will arrive successfully at E?

A. $1/8^4$

B. $1/16$

C. $1/32$

D. $1/256$

Your Answer: | Correct Answer: A | Not Attempted | Time taken: 00min 00sec | Discuss

Q #16 | Numerical Type | Award: 1 | Penalty: 0 | Computer Networks

For a host machine that uses the token bucket algorithm for congestion control, the token bucket has a capacity of 1 megabyte and the maximum output rate is 20 megabytes per second. Tokens arrive at a rate to sustain output at a rate of 10 megabytes per second. The token bucket is currently full and the machine needs to send 12 megabytes of data. The minimum time required to transmit the data is _____ seconds.

Your Answer: | Correct Answer: 1.1 | Not Attempted | Time taken: 00min 00sec | Discuss

Q #17 | Multiple Choice Type | Award: 1 | Penalty: 0.33 | Computer Networks

Which of the following is/are example(s) of stateful application layer protocol?

(i) HTTP

(ii) FTP

(iii) TCP

(iv) POP 3

A. (i) and (ii) only

B. (ii) and (iii) only

C. (ii) and (iv) only

D. (iv) only

Your Answer: | Correct Answer: C | Not Attempted | Time taken: 00min 00sec | Discuss

Q #18 | Multiple Choice Type | Award: 1 | Penalty: 0.33 | Computer Networks

Which of the following protocol pairs can be used to send and retrieve e-mails (in that order)?

A. IMAP, POP3

B. SMTP, POP3

C. SMTP, MIME

D. IMAP, SMTP

Your Answer: | Correct Answer: B | Not Attempted | Time taken: 00min 00sec | Discuss

Q #19 | Multiple Choice Type | Award: 1 | Penalty: 0.33 | Computer Networks

Which of the following fields of an IP header is NOT modified by a typical IP router?

A. Check sum

B. Source address

C. Time to Live (TTL)

D. Length

Your Answer: | Correct Answer: B | Not Attempted | Time taken: 00min 00sec | Discuss

Q #20 | Multiple Choice Type | Award: 1 | Penalty: 0.33 | Computer Networks

Consider the following statements.

(I) TCP connections are full duplex

(II) TCP has no option for selective acknowledgement

(III) TCP connections are message streams

A. Only I is correct

B. Only I and III are correct

C. Only II and III are correct

D. All of I, II and III are correct

Your Answer: | Correct Answer: A | Not Attempted | Time taken: 00min 00sec | Discuss

Q #21 | Numerical Type | Award: 2 | Penalty: 0 | Computer Networks

Consider a long-lived TCP session with an end-to-end bandwidth of 1Gbps $(= 10^9$ bits-per-second). The session starts with a sequence number of 1234 . The minimum time (in seconds, rounded to the closet integer) before this sequence number can be used again is ?

Your Answer: | Correct Answer: 35 | Not Attempted | Time taken: 00min 00sec | Discuss

Q #22 | Multiple Select Type | Award: 2 | Penalty: 0 | Computer Networks

Which of the following tasks does a router R in a packet-switched network perform when it gets a packet with destination address D? Choose the ones which are true.

A. looks up D in its routing table to determine the outgoing link.

B. sends out a HELLO packet or a routing protocol advertisement to its neighbors.

C. calculates the minimum-cost route to destination D.

D. may discard the packet.

Your Answer: | Correct Answer: A;D | Not Attempted | Time taken: 00min 00sec | Discuss

Q #23 | Multiple Choice Type | Award: 2 | Penalty: 0.67 | Computer Networks

Binary exponential backoff is a mechanism used in some MAC protocols. Which of the following statements is correct?

A. It ensures that two nodes that experience a collision in a time slot will never collide with each other when they each retry that packet.

B. It ensures that two or more nodes that experience a collision in a time slot will experience a lower probability of colliding with each other when they each retry that packet.

C. It can be used with slotted Aloha but not with carrier sense multiple access.

D. Over short time scales, it improves the fairness of the throughput achieved by different nodes compared to not using the mechanism.

Your Answer: | Correct Answer: B | Not Attempted | Time taken: 00min 00sec | Discuss

Q #24 | Multiple Select Type | Award: 2 | Penalty: 0 | Computer Networks

Consider a shared medium with N nodes running the slotted Aloha MAC protocol without any backoffs. A "wasted slot" is one in which no node sends data. The fraction of time during which no node uses the medium is called the "waste" of the protocol.

If the sending probability is p, which of the following are correct regarding the waste?

A. The waste is $(1-p)^N$.

B. The waste is p^N.

C. The smallest possible value of the waste is 0.

D. The largest possible value of the waste is 1.

Your Answer: | Correct Answer: A;C;D | Not Attempted | Time taken: 00min 00sec | Discuss

Q #25 | Multiple Choice Type | Award: 2 | Penalty: 0.67 | Computer Networks

Consider the following statements regarding TCP congestion control:

(i) In slow start, a sender doubles its window size every RTT if all sent packets were acknowledged.

(ii) In steady state, a sender increases its window size by one packet for each acknowledgement.

(iii) A sender that underestimates the round-trip time of a connection may unnecessarily induce a TCP timeout.

(iv) After detecting packet loss through a timeout, TCP halves its window size as a response to the path congestion.

Which of the above statements are True?

A. (i) and (iii) only

B. (i) and (ii) only

C. (i) and (iv) only

D. (i), (ii), and (iii) only

Your Answer: | Correct Answer: A | Not Attempted | Time taken: 00min 00sec | Discuss

Q #26 | Multiple Choice Type | Award: 2 | Penalty: 0.67 | Computer Networks

A subnetted Class B network has the following broadcast address: $144.16.95.255$ Its subnet mask

A. is necessarily $255.255.224.0$

B. is necessarily $255.255.240.0$

C. is necessarily $255.255.248.0$

D. could be any one of $255.255.224.0, 255.255.240.0, 255.255.248.0$

Your Answer: | Correct Answer: D | Not Attempted | Time taken: 00min 00sec | Discuss

Q #27 | Numerical Type | Award: 2 | Penalty: 0 | Computer Networks

X is an unknown 8-bit binary number. You are given another 8-bit binary number, Y, and told that the Hamming distance between X (the unknown number) and Y (the number you know) is one. How many bits of information about X have you been given?

Your Answer: | Correct Answer: 5 | Not Attempted | Time taken: 00min 00sec | Discuss

Q #28 | Multiple Select Type | Award: 2 | Penalty: 0 | Computer Networks

Let the generator be $g(x) = x^5$ then which of the following error(s) can NOT be detected?

A. x^3

B. x^5

C. $x^7 + x^{10}$

D. $x^8 + x^9 + x^{10}$

Your Answer: | Correct Answer: B;C;D | Not Attempted | Time taken: 00min 02sec | Discuss

Q #29 | Multiple Choice Type | Award: 2 | Penalty: 0.67 | Computer Networks

In an $\mathrm{IPv4}$ datagram, the M bit is 0 , the value of HLEN is 10 , the value of total length is 400 and the fragment offset value is 300. The position of the datagram, the sequence numbers of the first and the last bytes of the payload, respectively are:

A. Last fragment, 2400 and 2789

B. First fragment, 2400 and 2759

C. Last fragment, 2400 and 2759

D. Middle fragment, 300 and 689

Your Answer: | Correct Answer: C | Not Attempted | Time taken: 00min 00sec | Discuss

Q #30 | Multiple Choice Type | Award: 2 | Penalty: 0.67 | Computer Networks

Consider the following statements about the timeout value used in TCP.

I. The timeout value is set to the RTT (Round Trip Time) measured during TCP connection establishment for the entire duration of the connection.

II. An Appropriate RTT estimation algorithm is used to set the timeout value of a TCP connection.

III. The Timeout value is set to twice the propagation delay from the sender to the receiver.

Which of the following choices hold?

A. (i) is false, but (ii) and (iii) are true

B. (i) and (iii) are false, but (ii) is true

C. (i) and (ii) are false, but (iii) is true

D. (i), (ii) and (iii) are false

Your Answer: | **Correct Answer: B** | Not Attempted | Time taken: 00min 00sec | Discuss

Copyright & Stuff